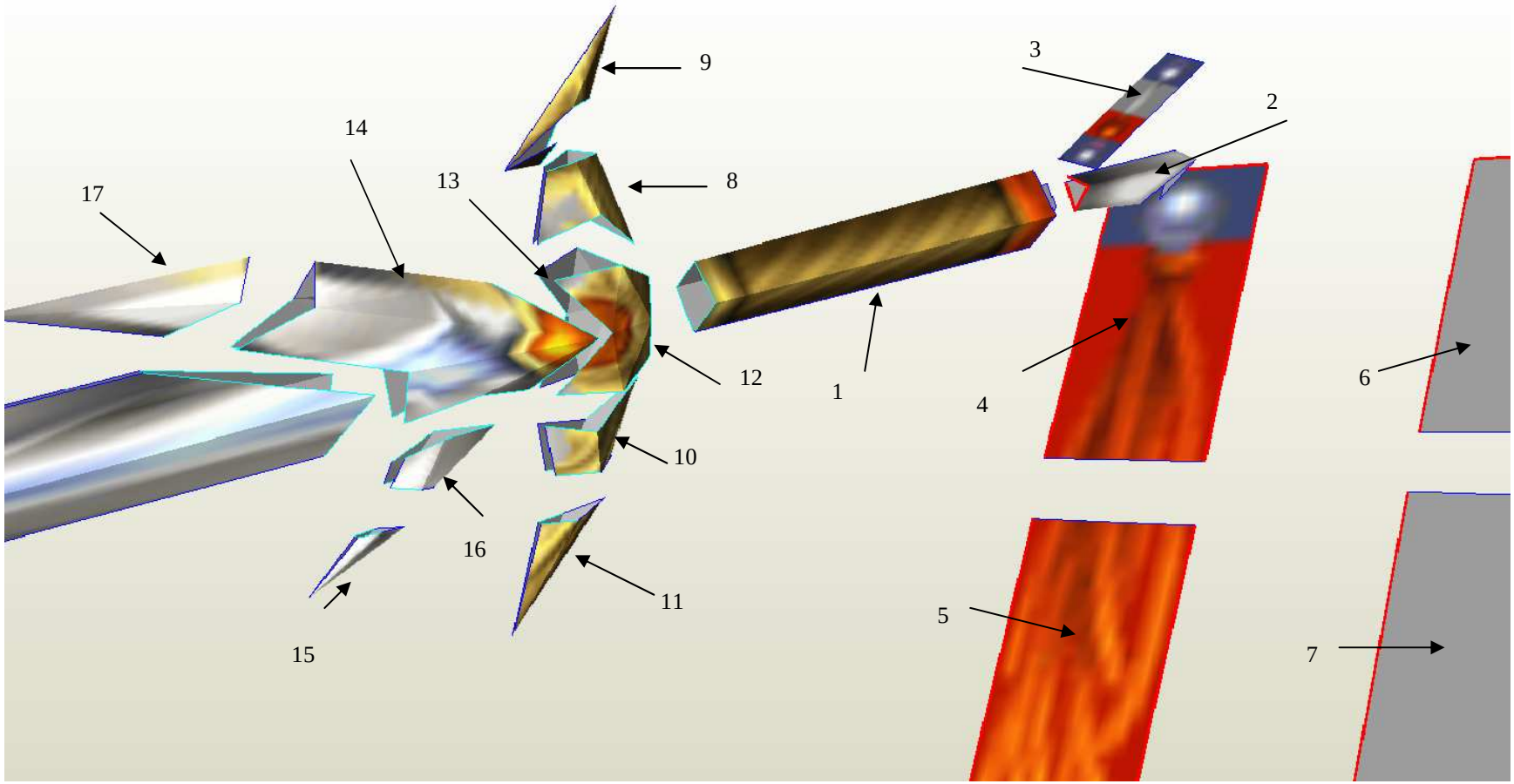

First build 1-3, trim the excess in 3, build 4-5, 6-7, trimm the excess

Build 8-9, 10-11 and attach with 12 and 13

Build 14-17

Assemble all together.

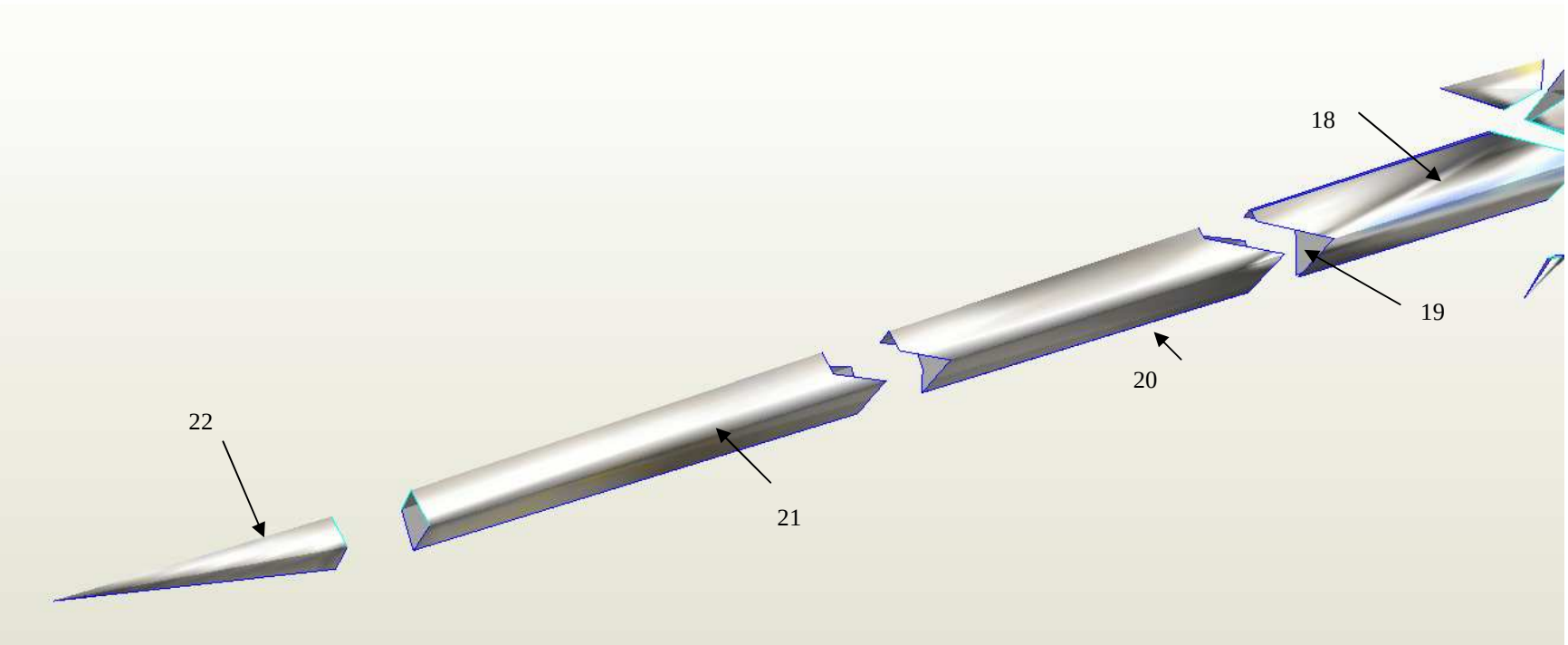

Assemble 18-22 and attach all to the grip, and it´s over.....